MERCURY
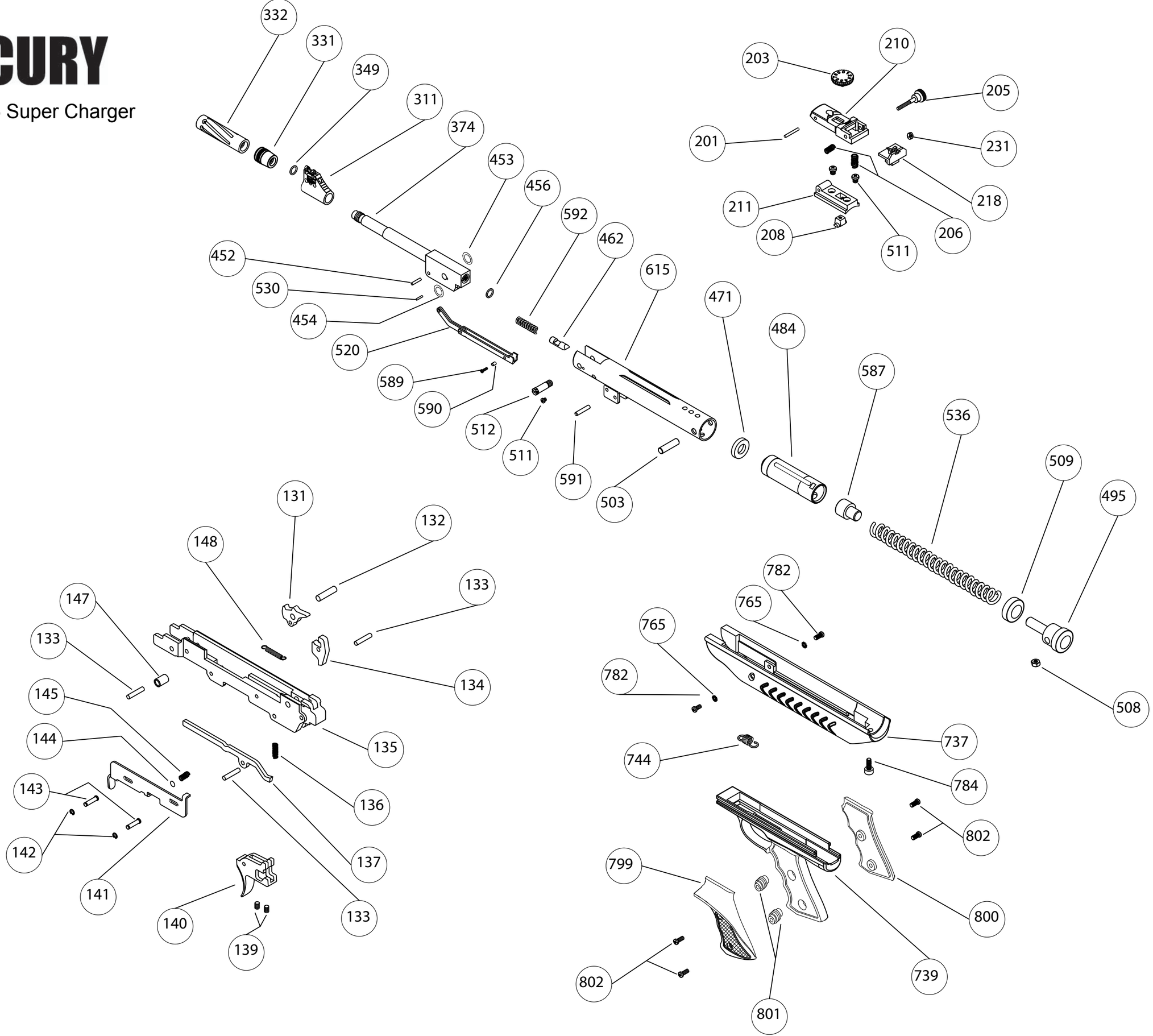
Luftpistole 25 Super Charger